Example: Employee records

The table structure shown below contains many unsatisfactory components and characteristics. For example, there are several multivalued attributes, naming conventions are violated, and some attributes are not atomic.

Sample EMPLOYEE Records

Attribute Name	Sample Value	Sample Value	Sample Value	Sample Value
EMP_NUM	1003	1018	1019	1023
EMP_LNAME	Willaker	Smith	McGuire	McGuire
EMP_EDUCATION	BBA, MBA	BBA		BS, MS, Ph.D.
JOB_CLASS	SLS	SLS	JNT	DBA
EMP_DEPENDENTS	Gerald (spouse), Mary (daughter), John (son)		JoAnne (spouse)	George (spouse) Jill (daughter)
DEPT_CODE	MKTG	MKTG	SVC	INFS
DEPT_NAME	Marketing	Marketing	General Service	Info. Systems
DEPT_MANAGER	Jill H. Martin	Jill H. Martin	Hank B. Jones	Carlos G. Ortez
EMP_TITLE	Sales Agent	Sales Agent	Janitor	DB Admin
EMP_DOB	23-Dec-1968	28-Mar-1979	18-May-1982	20-Jul-1959
EMP_HIRE_DATE	14-Oct-1997	15-Jan-2006	21-Apr-2003	15-Jul-1999
EMP_TRAINING	L1, L2		L1	L1, L3, L8, L15
EMP_BASE_SALARY	$38,255.00	$30,500.00	$19.750.00	$127,900.00
EMP_COMMISSION_RATE	0.015	0.010		

(1) Given the structure shown in this table, write the relational schema and draw its dependency diagram. Label all transitive and/or partial dependencies.

The dependency diagram is shown below. Note that the order of the attributes has been changed to make the transitive dependencies easier to mark. (In any case, the order in which the attributes are written into a relational database table is immaterial.) The relational schema is written below.

The Dependency Diagram

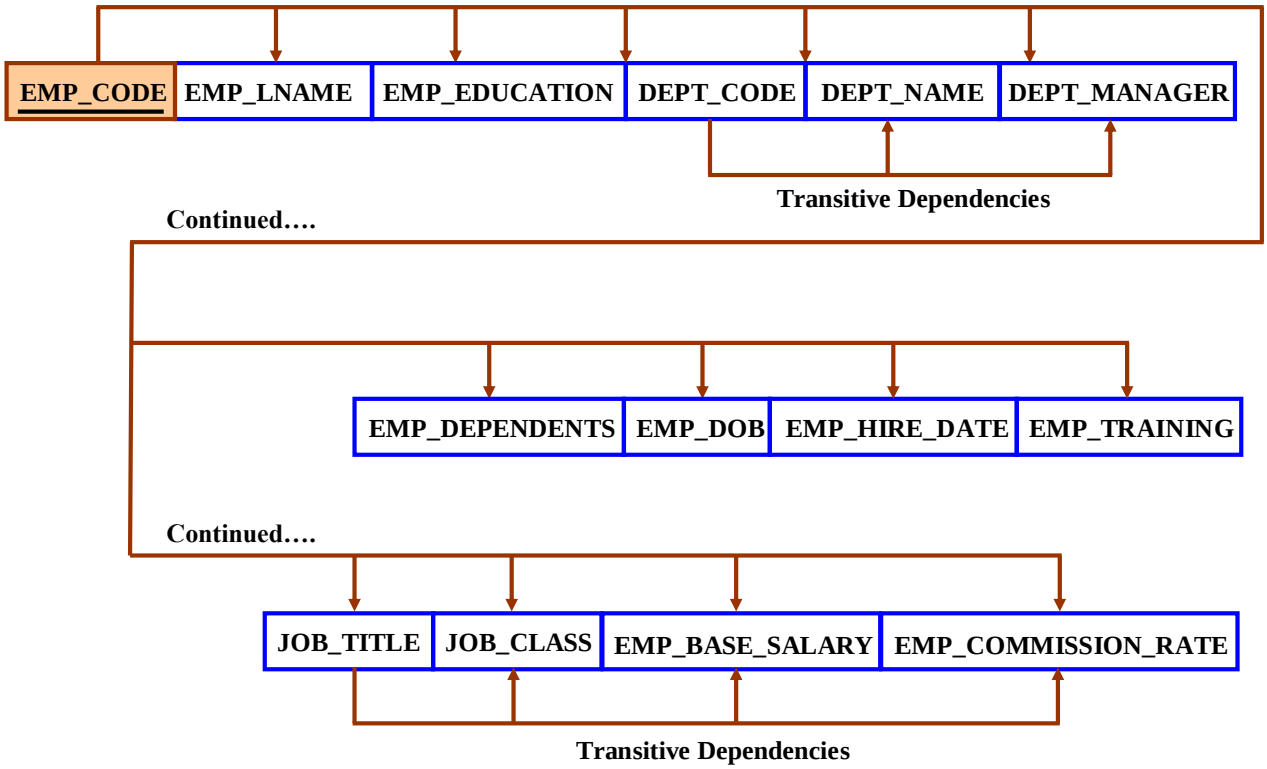

The relational schema is written as:

EMPLOYEE(**EMP_CODE**, EMP_LNAME, EMP_EDUCATION, JOB_CLASS,
EMP_DEPENDENTS,DEPT_CODE, DEPT_NAME, DEPT_MANAGER,
EMP_TITLE, EMP_DOB, EMP_HIRE_DATE, EMP_TRAINING,
EMP_BASE_SALARY, EMP_COMMISSION_RATE)

(2) Draw the dependency diagrams that are in 3NF. (*Hint*: You might have to create a few new attributes. Also make sure that the new dependency diagrams contain attributes that meet proper design criteria; that is, make sure there are no multivalued attributes, that the naming conventions are met, and so on.)

Dependency diagrams have no way to indicate multi-valued attributes, nor do they provide the means through which such attributes can be handled. Therefore, the solution to this problem requires a basic knowledge of modeling concepts, once again indicating that normalization and design are part of the same process. Given the sample data shown, EDUCATION, DEPENDENT and QUALIFICATION are multi-valued attributes whose values are stored as strings. We need to create the appropriate entities to avoid the use of multi-valued attributes.

The Dependency Diagrams:

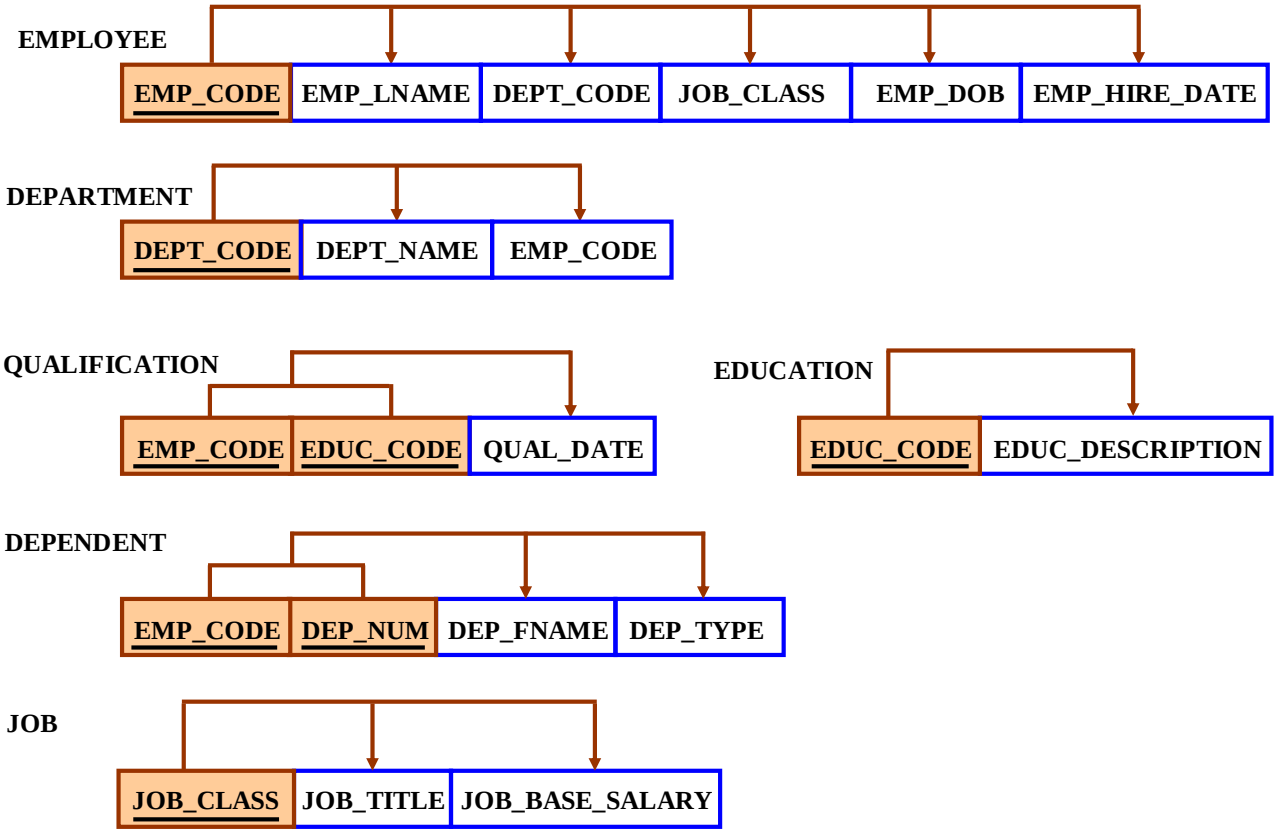

Note that a real world design would have to include additional entities or additional attributes in the existing entities. For example, while the job description is likely to include a (job) base salary, employee experience – perhaps measured by time in the job classification and performance – is likely to add to the job's base salary. Therefore, the EMPLOYEE table might include a salary or hourly wage adjustment attribute. Overall employment longevity is likely to be included, too … employers often find it useful to keep (expensive) job turnover rates low. And, of course, you might include year-to-date (YTD) earnings and taxes in each employee's records, too.

The relational schemas are written as:

EMPLOYEE (**EMP_CODE**, EMP_LNAME, DEPT_CODE, JOB_CLASS, EMP_DOB, EMP_HIREDATE)

DEPENDENT (**EMP_CODE**, **DEP_NUM**, DEP_FNAME, DEP_TYPE)

DEPARTMENT (**DEPT_CODE**, DEPT_NAME, EMP_CODE)

JOB (**JOB_CLASS**, JOB_TITLE, JOB_BASE_SALARY)

EDUCATION (**EDUC_CODE**, EDUC_DESCRIPTION)

QUALIFICATION (**EMP_CODE**, **EDUC_CODE**, QUAL_DATE_EARNED)

(3) Draw the relational diagram.

The relational diagram is shown below.

The Relational Diagram

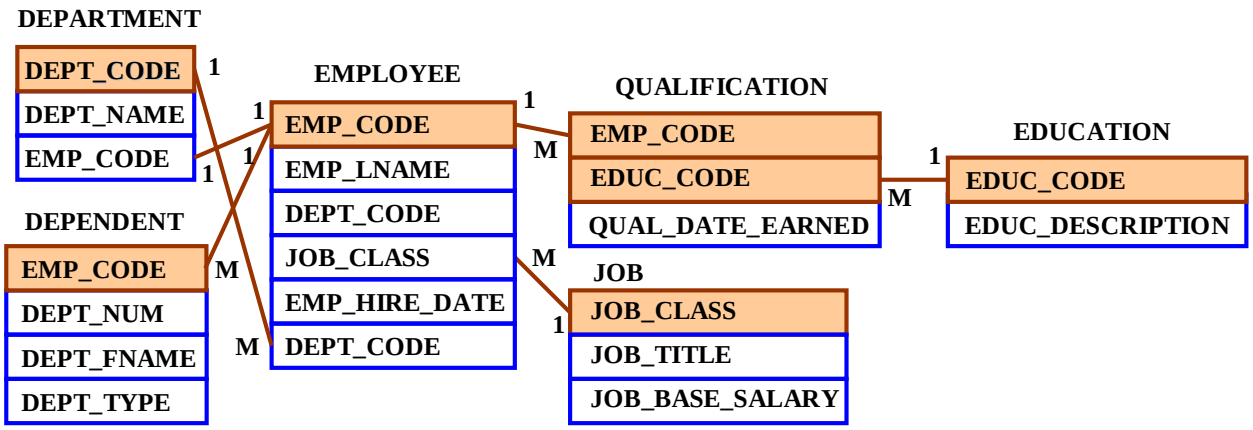
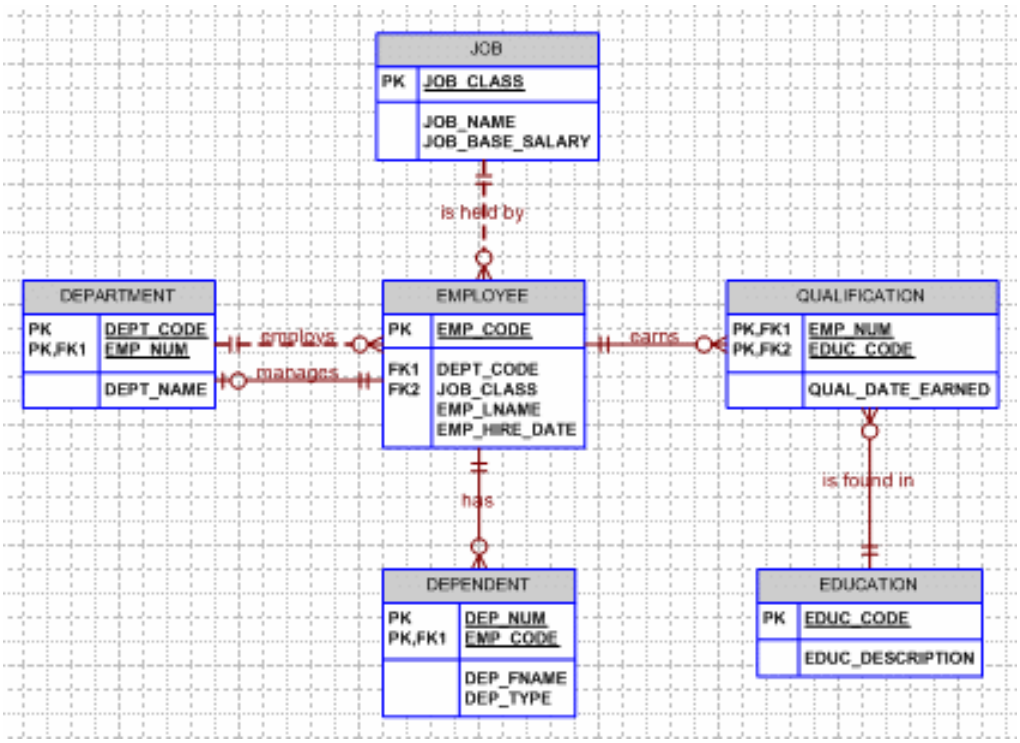
(4) Draw the Crow's Foot ERD.